invensys

Eurotherm

2200e FM

Installation and Operation Handbook

2200e Temperature Alarm Unit

HA027696/5
February 2013

© 2013 Eurotherm Limited

All rights are strictly reserved. No part of this document may be reproduced, modified, or transmitted in any form by any means, nor may it be stored in a retrieval system other than for the purpose to act as an aid in operating the equipment to which the document relates, without the prior, written permission of Eurotherm Limited.

Eurotherm Limited pursues a policy of continuous development and product improvement. The specification in this document may therefore be changed without notice. The information in this document is given in good faith, but is intended for guidance only. Eurotherm Limited will accept no responsibility for any losses arising from errors in this document.

MODELS 2216e, 2208e and 2204e FM TEMPERATURE ALARM UNITS

INSTALLATION AND OPERATION HANDBOOK

Contents

This product is covered by US Patent 5,484,206

This manual applies to instrument software version A4.51.

Issue 5 updates the wording of the supply voltage spec to 100 - 230Vac ±15% from 85Vac – 264Vac.

WARNING NOTICE

Re-assignment of Relay Outputs from 2200 Phase 1 to 2200E FM Alarm Units

If you are using this 2200E FM Alarm Unit to replace an existing 2200 phase 1 FM Alarm Unit, please note that the assignment of the alarms to the physical outputs has changed.

A phase 2 unit is identified by the letter 'E' after the model type.

A phase 1 unit does not have the letter 'E'.

In the 2200E, alarm 1 is assigned to the AA output and alarm 2 to the 3A output.

In phase 1 units, alarm 1 is assigned to the 3A output and alarm 2 to the AA output.

See terminal assignment below:-

2200E alarm assignment (Supplied from March 2002)

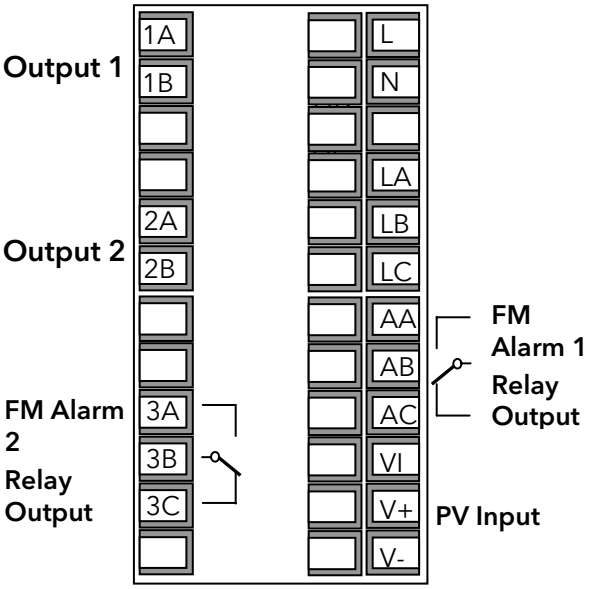

2200 Phase 1 alarm assignment (Supplied until December 2002)

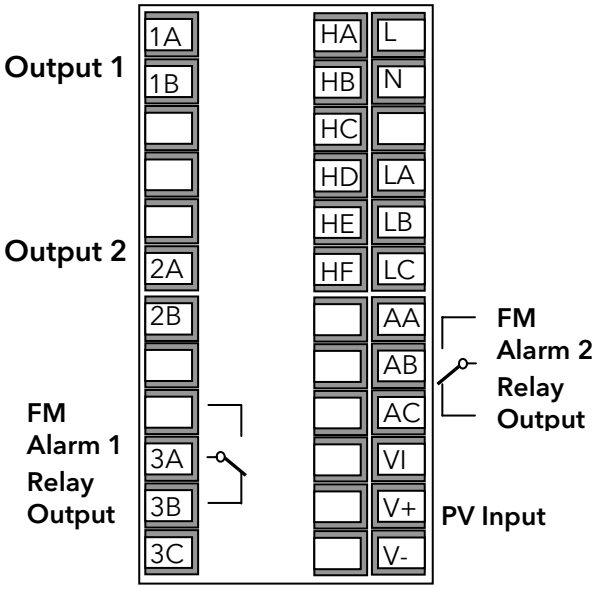

When replacing a phase 1 unit with a 2200E, the 2200E must be configured to reflect this change.

To do this – select configuration level, then set:-

Alarm 1 configuration to = Alarm 2 configuration in the phase 1 2200

Alarm 2 configuration to = Alarm 1 configuration in the phase 1 2200

In Operator Level, alarm 1 setpoint will now apply to the AA output and alarm 2 to the 3A output.

1. CHAPTER 1 INSTALLATION

1.1 General Views

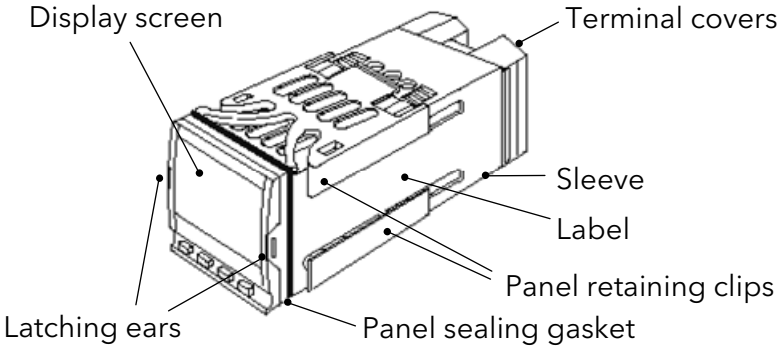

Figure 1-1a: Model 2216FM 1/16 DIN FM alarm unit

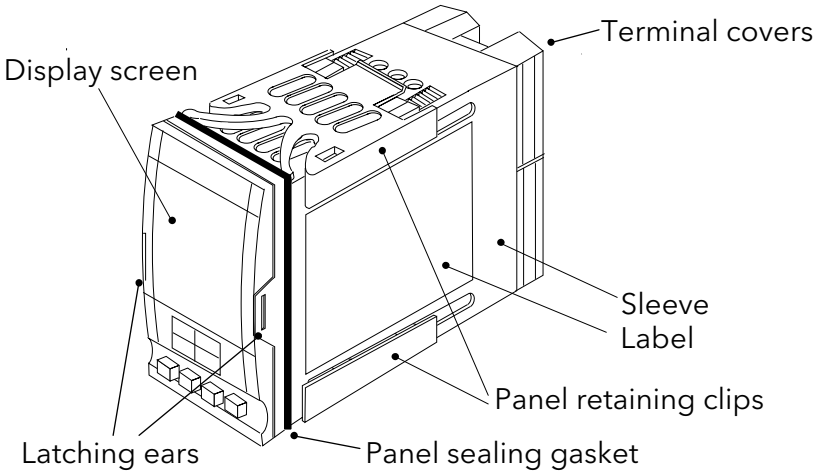

Figure 1-1b: Model 2208e 1/8 DIN FM alarm unit

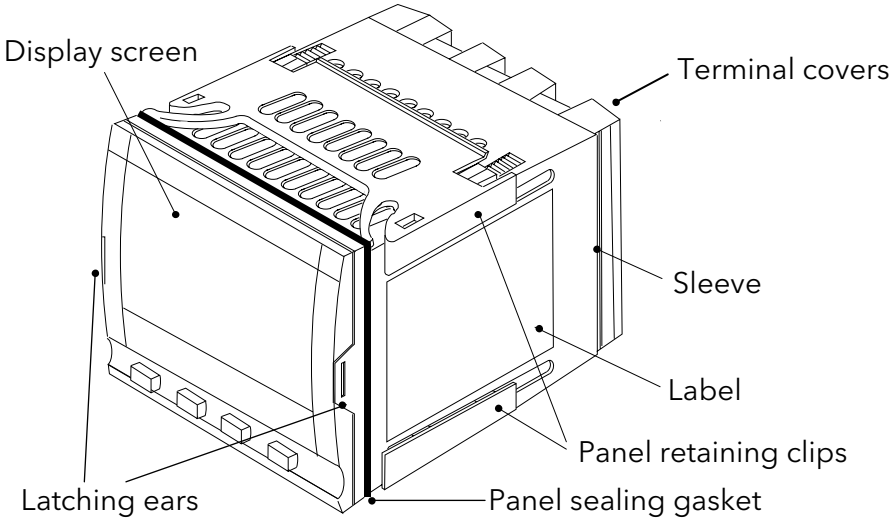

Figure 1-1c: Model 2204e 1/4 DIN FM alarm unit

1.2 Outline dimensions

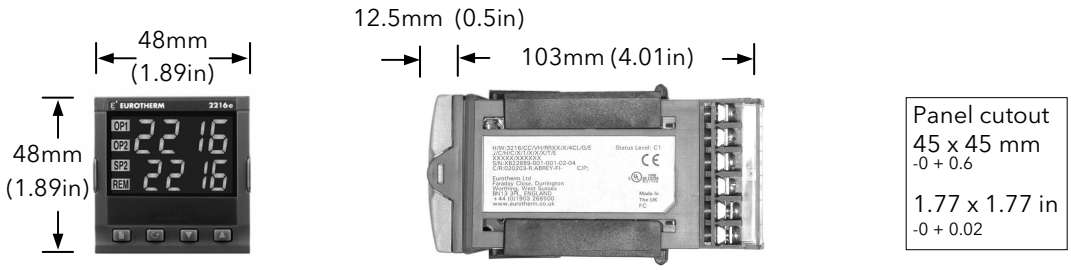

Figure 1-2a: Outline dimensions of Model 2216eFM alarm unit

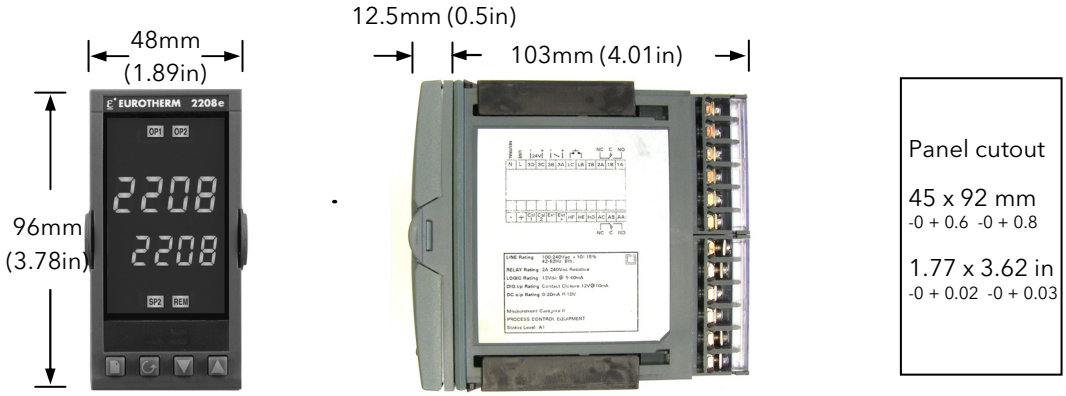

Figure 1-2b: Outline dimensions of Model 2208e alarm unit

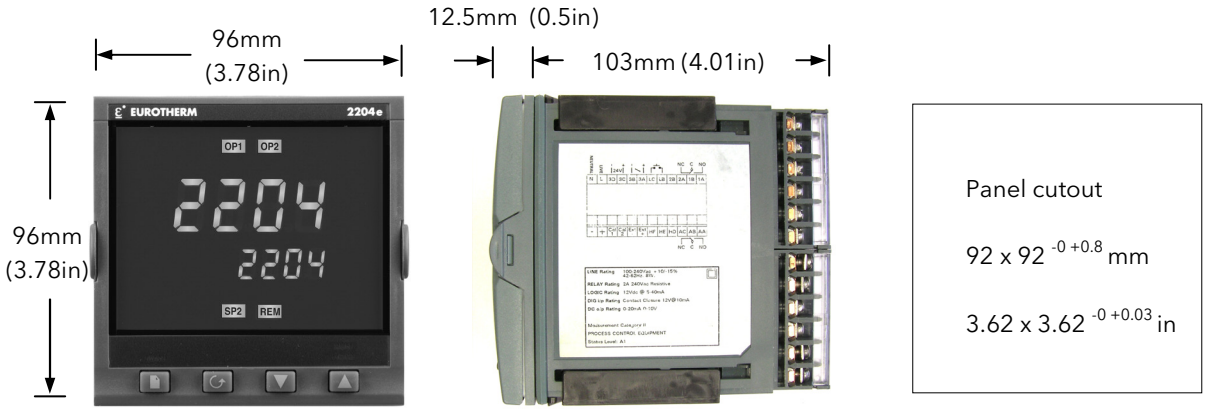

Figure 1-2c: Outline dimensions of Model 2204e alarm unit

The electronic assembly of the alarm unit plugs into a rigid plastic sleeve, which in turn fits into the standard DIN size panel cut-out shown in Figure 1-2

1.2.1 Recommended minimum spacing of controllers

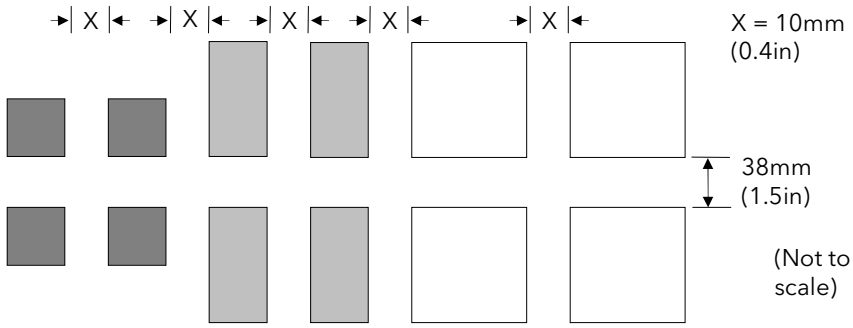

1.3 Introduction

The Model 2216e is an accurate indicator and alarm unit with one, FM compliant, alarm relay output fitted as standard. It has two optional outputs 1 and 2. Output 2 can be fitted with a second FM alarm relay or Alarm Acknowledge input. Output 1 can be fitted with either: dc retransmission of PV, an additional alarm relay output, or an alarm acknowledge input. A communications option is also available.

The 2208e and 2204e FM alarm units have two FM compliant, alarm relay outputs fitted as standard. In addition they has two optional outputs 1 and 2. Output 1 can be fitted with either: dc retransmission of PV, an additional alarm relay output, or an alarm acknowledgement input. Output 2 can be fitted with an additional, non–FM compliant alarm relay output. A communications option is also available.

The FM compliant relay outputs are configurable as absolute high or low alarms. They are fixed as latching alarms, de-energised in the alarm state. It is not possible to configure them otherwise.

WARNING

Before installing the alarm unit, please read *Safety Information Appendix B*

1.3.1 Alarm unit labels

The labels on the sides of the alarm unit identify the ordering code, serial number, and electrical connections.

1.4 MECHANICAL INSTALLATION

1.4.1 To install the alarm unit

1. Prepare the control panel cut-out to the appropriate size shown in Figure 1-2.
2. Insert the alarm unit through the cut-out.
3. Spring the upper and lower panel retaining clips into place. Secure the alarm unit in position by holding it level and pushing both retaining clips forward.

Note: If the panel retaining clips subsequently need removing, to extract the alarm unit from the control panel, they can be unhooked from the side with either your fingers or a screwdriver.

1.4.2 Unplugging and plugging-in the alarm unit

If required, the alarm unit can be unplugged from its sleeve by easing the latching ears outwards and pulling it forward out of the sleeve. When plugging the alarm unit back into its sleeve, ensure that the latching ears click into place in order to secure the IP 65 sealing.

1.5 Electrical installation

This section consists of four topics:

- Electrical connections
- Outputs 1 and 2 connections
- Communications connections
- Typical wiring diagram

WARNING

Before installing the alarm unit you must ensure that it is correctly configured for your application. Incorrect configuration could result in damage to the process being controlled, and/or personal injury. The alarm unit may either have been configured when ordered, or may need configuring now.

1.5.1 Wire Sizes

All electrical connections are made to the screw terminals at the rear of the alarm unit. They accept wire sizes from 0.5 to 1.5 mm^2 (16 to 22 awg). The terminals are protected by a clear plastic hinged cover to prevent hands or metal making accidental contact with live wires.

1.6 Electrical connections

The electrical connections are shown in Figure 1-3.
Please note that outputs 1 and 2 can be any one of the types shown in figure 1-4.

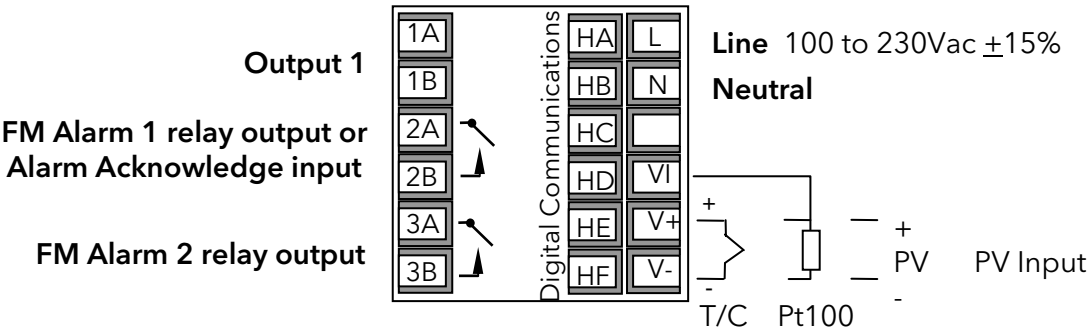

Figure 1-3a: Model 2216e FM electrical connections

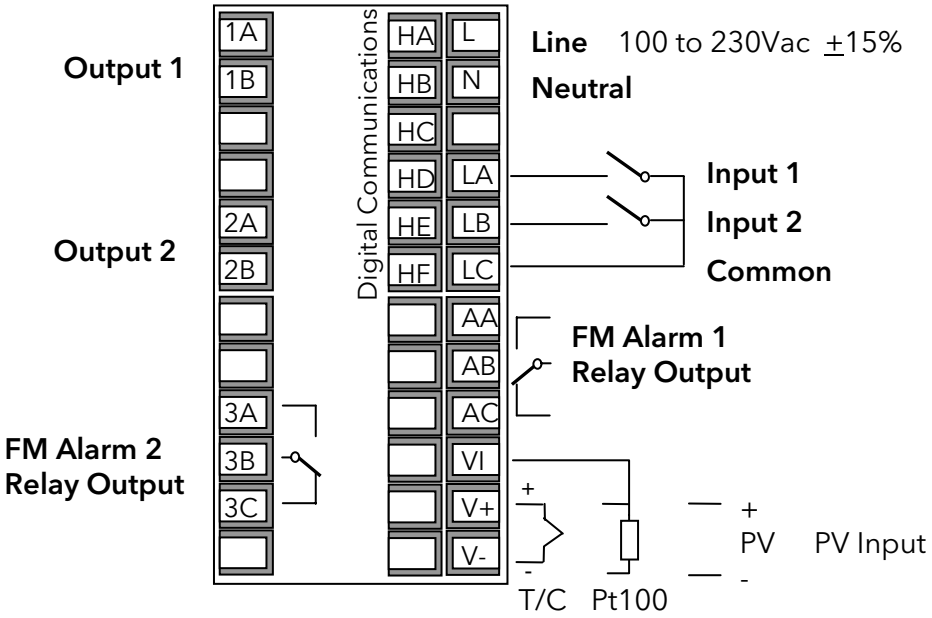

Figure 1-3b: Models 2208e & 2204e electrical connections

1.6.1 Sensor input connections

The connections for the various types of input are as follows:

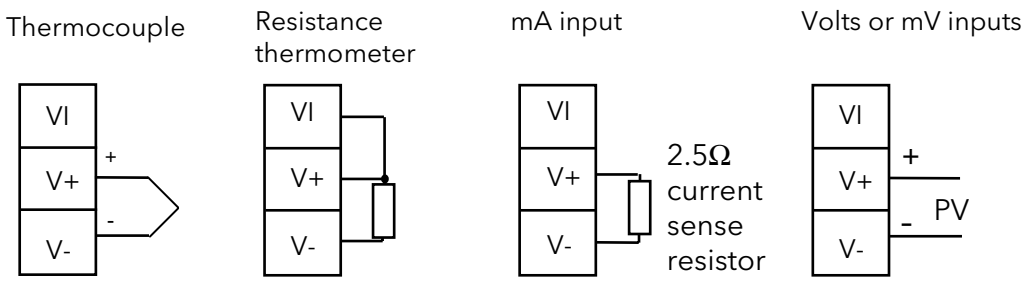

Figure 1-4 Sensor input connections

1.6.2 Outputs 1 and 2

Output 1 can be either an additional alarm relay output, 0-20mA retransmission of PV or a contact input for alarm acknowledge. Output 2 can be an additional alarm relay output or a contact input for alarm acknowledgement.

To check which outputs are installed in your particular unit refer to the ordering code and the wiring information on the alarm unit side labels.

	Connections			
	Output 1		**Input/Output 2**	
Module type	**1A**	**1B**	**2A**	**2B**
Relay: 2-pin *(2A, 264 Vac max.)*				
0-20mA, PV retransmission	**+**	**-**		
Alarm acknowledge Contact input				

Figure 1-5 Output 1 and 2 connections

1.6.3 Snubbers

The alarm unit is supplied with 'snubbers' (15nF +100Ω) which should be wired across the relay outputs when switching inductive loads such as mechanical contactors. The 'snubbers' are used to prolong contact life and to suppress interference when switching such loads. The 'snubbers' pass 0.6mA at 110Vac and 1.2mA at 240Vac. This may be sufficient to hold in high impedance relay coils and should not be used in such installations.

WARNING

When a relay contact is used in an alarm circuit it is the user's responsibility to ensure that the current passing through the snubber when the relay contact is open does not hold in low power electrical loads and thereby interfere with the failsafe operation of the alarm circuit.

1.7 Digital Communications Connections

A Modbus digital communications board may be installed. Communications to this unit are read-only. Either RS 232, RS 422 or RS 485 communications can be fitted. The electrical connections are shown below

Communications type	Connections				
	HB	HC	HD	HE	HF
RS 232	Not used	Not used	Common	A (RX)	B (TX)
RS 422	A' (RX+)	B' (RX-)	Common	A (TX+)	B (TX-)
RS 485			Common	A	B

Figure 1-6 Digital Communications Connections

1.8 Example Wiring of EIA-485 serial communication links

EIA-485 is a 2-wire connection which allows up to 16 alarm units to be multi-dropped from a single communications link over a distance of up to 1.2Km. To ensure reliable operation of the communications link, (without data corruption due to noise or line reflections) the connections between the alarm unit should be made using a twisted pair of wires inside a screened cable with the connections terminated with resistors in the manner shown in this diagram.

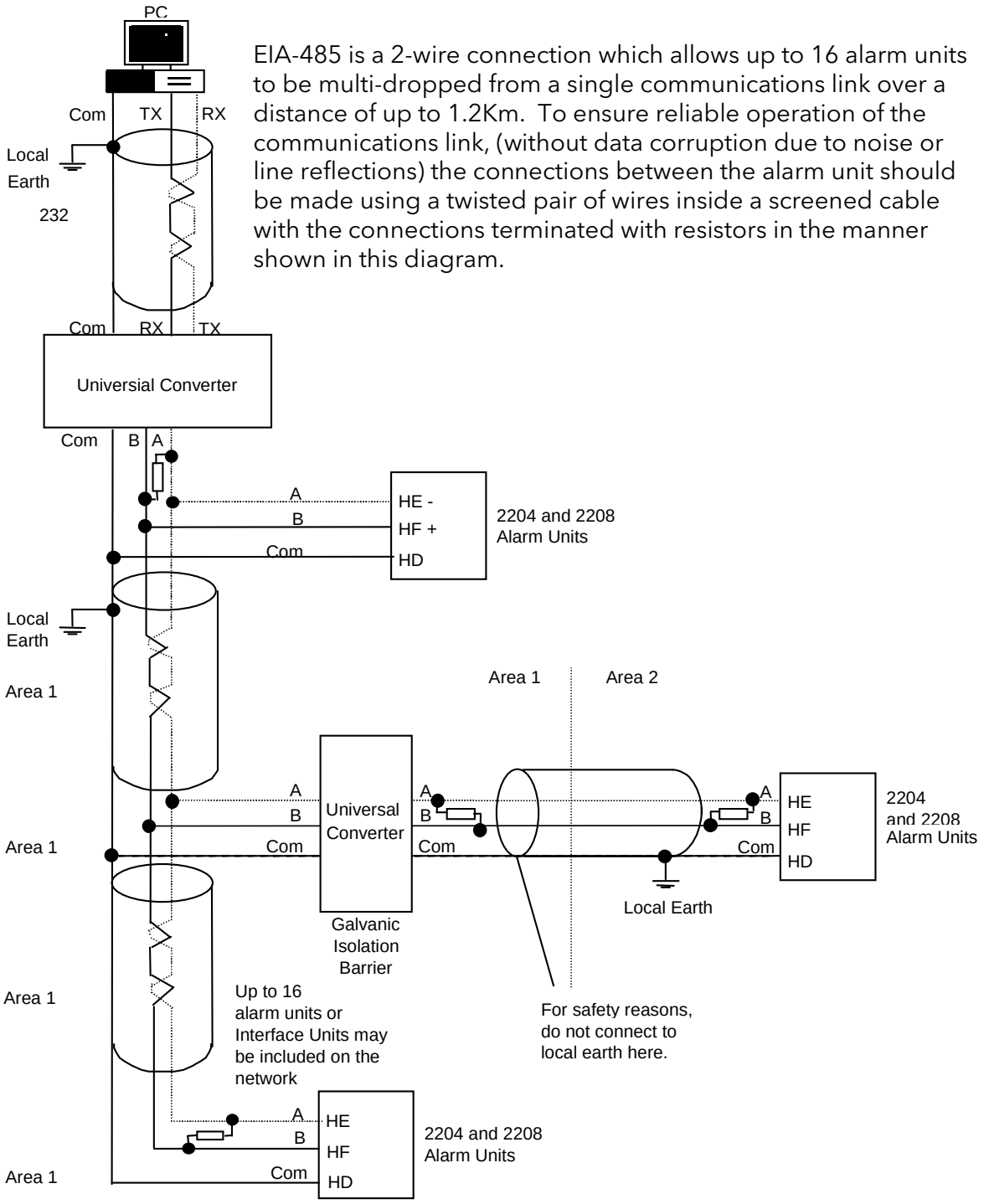

Note:
All resistors are 220 ohm 1/4W carbon composition.
Local grounds are at equipotential. Where equipotential is not available wire into separate zones using a galvanic isolator.

Figure 1-7 EIA-485 wiring

2. CHAPTER 2 OPERATION

2.1 FRONT PANEL LAYOUTs

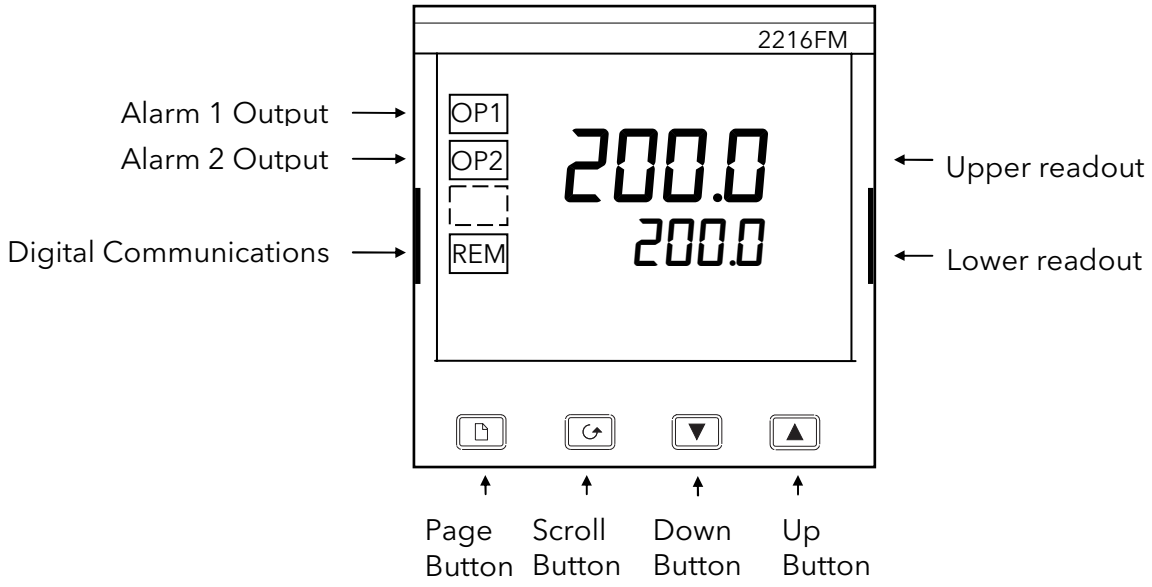

Figure 2-1a: 2216e 1/16 DIN Front Panel Layout

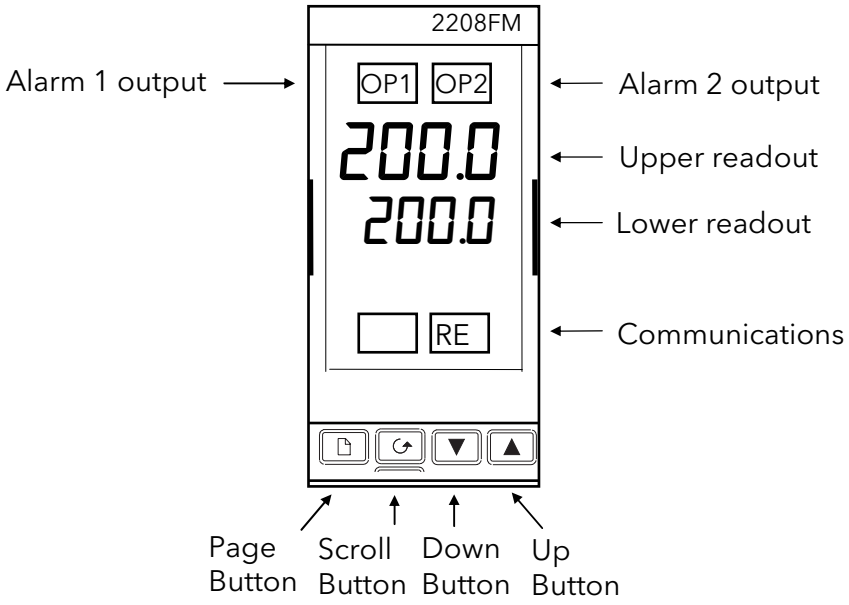

Figure 2-1b: 2208e 1/8 DIN Front Panel Layout

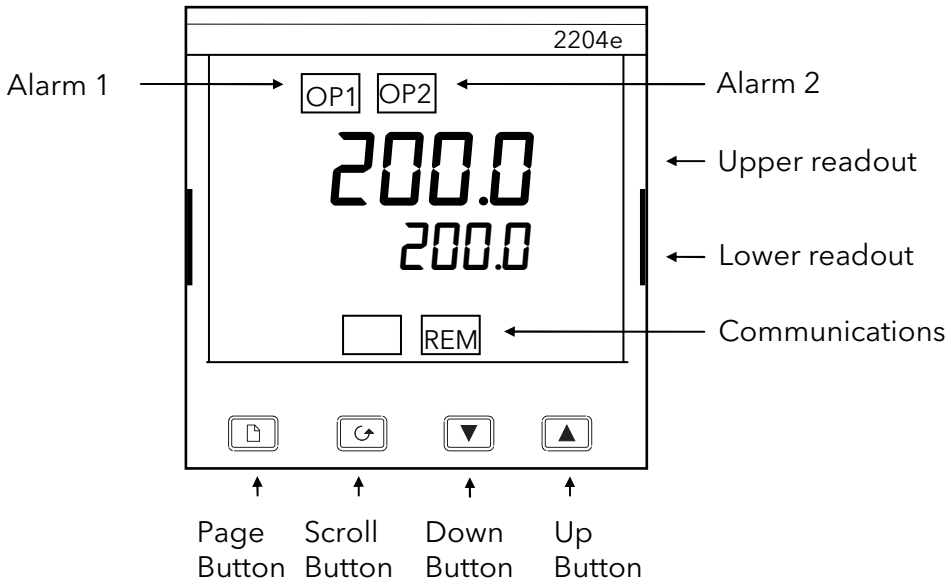

Figure 2-1c: 2204e 1/4 DIN Front Panel Layout

2.2 Buttons and Beacons

Button or beacon	Description	Action
OP1	Alarm 1 output	Flashes for a new alarm 1. Is steady for an acknowledged alarm
OP2	Alarm 2 output	Flashes for a new alarm 2. Is steady for an acknowledged alarm
REM	Remote	Flashes when digital comms is active.
	Reset/Page button	Press to acknowledge & reset alarms, or press to select a parameter list heading.
	Scroll button	Press to select a parameter in a list.
	Down button	Press to decrease a value in the lower readout.
	Up button	Press to increase a value in lower readout.

Figure 2-2: Buttons and Beacons

2.3 POWER UP

On power up the unit runs through a self-test sequence for about three seconds and then displays the temperature or process value (PV) in the upper readout. This is called the Home display. The Home display can be configured to display the just the PV, or the PV with either alarm setpoint 1 or alarm setpoint 2 in the lower readout.

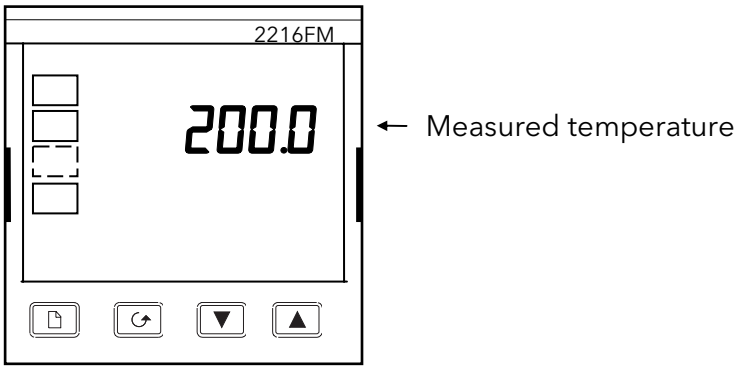

Figure 2-3: Home display

Note: You can get back to the Home display at any time by pressing and together. Alternatively you will always be returned to the Home display if no button is pressed for 45 seconds or whenever the power is turned on.

2.4 Alarm messages

If the unit detects an alarm, it will flash a message in the lower readout of the Home display. A new alarm will be displayed as a double flash followed by a pause. Old (acknowledged) alarms will be displayed as a single flash followed by a pause. In the case of alarm 1 and alarm 2, the front panel beacons OP1 and OP2 will flash if a new alarm occurs.

To acknowledge an alarm press the button. After the alarm has been acknowledged the beacon will be lit constantly.

When the alarm condition is corrected, an alarm acknowledge will clear the beacon and the alarm relay will return to the safe state. If there is more than one alarm condition, the display cycles through all the relevant alarm messages. The alarm messages and their meanings are as follows.

Alarm message	What it means
-FSH*	Full Scale High alarm
-FSL*	Full Scale Low alarm
S.br	Sensor Break. The input is open circuit
Pwr.F	Power failure alarm.

Table 2-4: Alarm messages

**In place of the dash, the first character will indicate the alarm number*

2.5 Parameter Access and Adjustment

The navigation diagram, Figure 2-5, shows all of the operation parameters potentially available. In practice the parameters that appear will depend on the configuration of the unit. E.g. if alarm 3 has not been configured it will not appear as a parameter in the alarm list.

The shaded boxes in the diagram indicate parameters that are hidden in normal operation. To see all the available parameters, you must select 'Full' access level. For more information about this, see Chapter 3, *Access Levels*.

The parameters are arranged in lists as shown in the navigation diagram. Each list has a *list header*. The list headers are:

Home list	*Input list*	*Access list*
Alarm list	*Communications list*	

To step through the list headers press the *Page* button. You can recognise a list header by the fact that it always displays 'Li St' in the lower readout. Depending upon how your alarm unit has been configured, a single press may momentarily flash the display units. In this case, a double press will be necessary to take you to the first list header. Continued pressing of the button will step through the list headers, eventually returning you to the Home display.

Example list header display

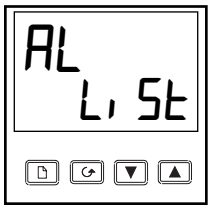

← List name

← Always displays 'Li St'

In the above example, AL is the Alarm list header. List headers are always read-only.

To step through the parameters within a particular list, press the *Scroll* button.
When you reach the end of a list you will return to the list header.
From within a list you can return to the list header at any time by pressing the Page button.

Example parameter display

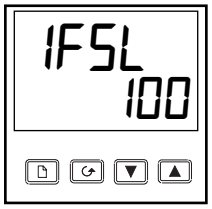

← Parameter name

← Parameter value

The upper readout shows the name of the parameter and the lower readout its value. In the above example, the parameter mnemonic is IFSL (indicating *Alarm 1, full scale low*), and the parameter value is 10.0..

Alterable parameters can be changed by pressing the ▲ or ▼ buttons. Two seconds after releasing either button, the display blinks to show that the new value has been accepted

The parameter tables later in this chapter list all the parameter names and their meaning.

2.6 Navigation Diagram

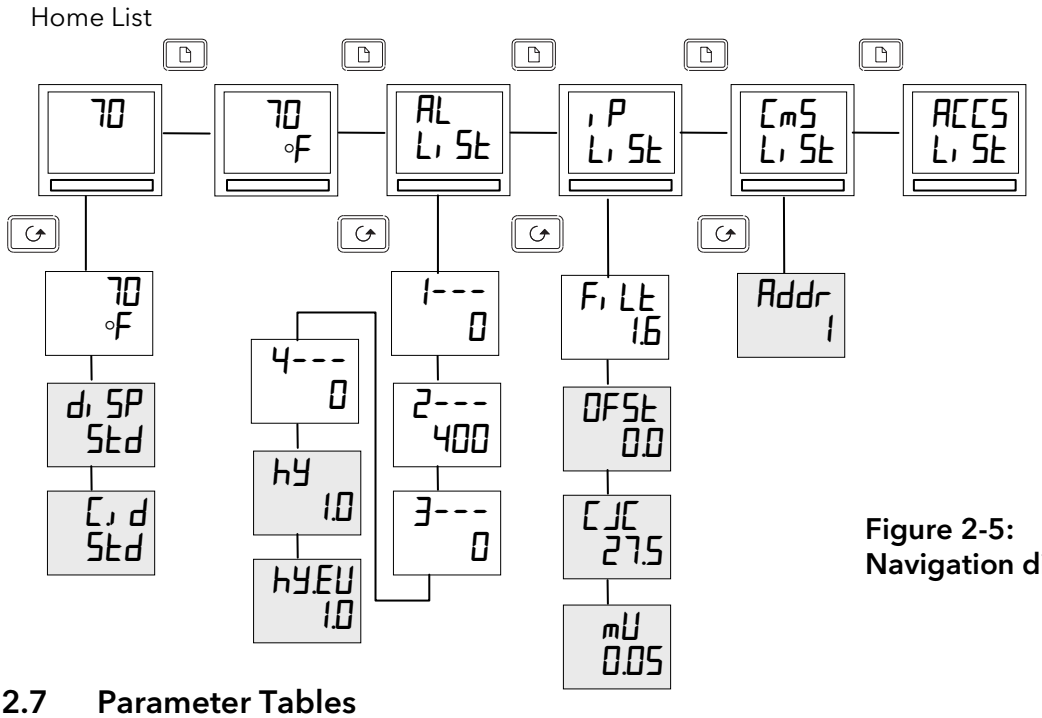

Figure 2-5: Navigation diagram

2.7 Parameter Tables

Name	Parameter Description

	Home list	
di SP	Home display configuration	
	Std	Standard (PV only displayed)
	A1.SP	Alarm 1 setpoint in lower display
	A2.SP	Alarm 2 setpoint in lower display
Cid	Customer defined Instrument id	

AL	Alarm list
1---	Alarm 1 setpoint
2---	Alarm 2 setpoint
3---	Alarm 3 setpoint
4---	Alarm 4 setpoint
hY	Alarm hystersis
hY.EU	Event output hystersis
In place of dashes, the last three characters indicate the alarm type as follows:	
FSH	Full scale high alarm
FSL	Full scale low alarm

1P	Input list
FiLt	Input filter time constant. 1.0 to 999.9 seconds
OFSt	Process value calibration offset
CJC°	Measured cold junction temperature in °C
mU	Millivolt inputs

cmS	Comms list
Addr	Communications Address

Note: The instrument must be powered off and on to implement the comms address change.

ACCS	Access List
codE	Full and Edit level password entry
Goto	Goto level - OPEr, FuLL, Edit or conF
ConF	Configuration level password entry

Note: After selecting the password value wait 2 to 3 seconds for the unit to verify.

2.8 Alarm Modes

The alarm in output 1 can be configured to operate in one of several modes, either:

- **Non-latching**, which means that the alarm will automatically clear when the alarm condition no longer exists.
- **Latching**, which means that the alarm message will continue to flash even if the alarm condition no longer exists. Latched alarms are cleared (*acknowledged)* by pressing either the Page or Scroll button.
- **Blocking,** which means that the alarm will only become active after it has first entered a safe state after powering up

2.9 Diagnostic Alarm Messages

These indicate that a fault exists in either the alarm unit or the connected devices.

Display shows	What it means	What to do about it
EE.Er	*Electrically Erasable Memory Error:* The value of an operator or configuration parameter has been corrupted.	This fault will automatically take you into configuration level. Check all of the configuration parameters before returning to operator level. Once in operator level, check all of the operator parameters before resuming normal operation. If the fault persists or occurs frequently, contact Eurotherm Controls Inc.
Hw.Er or no.o	*Hardware error* Indication that a module is of the wrong type, missing or faulty.	Check that the correct modules are fitted.
LLLL	*Out of range low reading.*	Check the value of the input.
HHHH	*Out of range high reading.*	Check the value of the input.
Err 1	*Error 1:* ROM self-test fail.	Return the alarm unit for repair.
Err2	*Error 2:* RAM self-test fail.	Return the alarm unit for repair.
Err3	*Error 3:* Watchdog fail.	Return the alarm unit for repair.
Err4	*Error 4: Keyboard failure* Stuck button, or a button was pressed during power up.	Switch the power off and then on without touching any of the alarm unit buttons.
Err5	*Error 5: Input circuit failure.*	Return the alarm unit for repair.

Table 2-6: Diagnostic alarms

3. CHAPTER 3 ACCESS LEVELS

This chapter describes the different levels of access to the parameters within the alarm unit.

There are three topics:

- THE DIFFERENT ACCESS LEVELS
- SELECTING AN ACCESS LEVEL
- EDIT LEVEL

3.1 THE DIFFERENT ACCESS LEVELS

There are four access levels:

- **Operator level**, which will normally be used to operate the alarm unit
- **Full level**, to gain access to all operator parameters. This gives access to hidden parameters – used, for instance, for commissioning.
- **Edit level**, which is used hide or 'promote' parameters and define whether they are read only or alterable.
- **Configuration level** which is used to set up the fundamental characteristics of the unit.

Access level	Display shows	What you can do	Password Protected
Operator	OPEr	In this level operators can view and adjust the value of parameters defined in Edit level (see below).	No
Full	FuLL	In this level all the operator parameters relevant to a particular configuration are visible. All alterable parameters may be adjusted.	Yes
Edit	EdıE	In Edit level you define which parameters an operator will be able to access. You can hide or reveal complete lists and individual parameters within each list. You can make parameters read-only or alterable.	Yes
Configuration	conF	Configuration sets up the fundamental characteristics of the unit. See Chapter 4	Yes

Figure 3-1: Access levels

3.2 Selecting An Access Level

Access to Full, Edit or Configuration levels is protected by a password to prevent unauthorised access.
If you need to change the password, see section **Error! Reference source not found.** , Configuration

3.2.1 Access list header

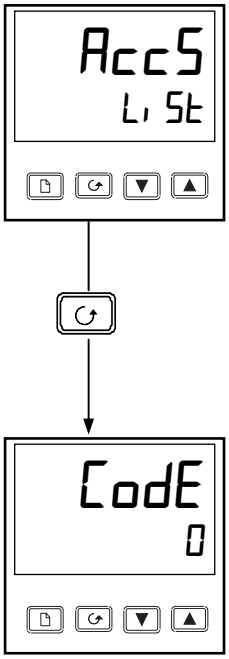

Press until you reach the access list header 'ACCS'.

Press the Scroll button

3.2.2 Password entry

The password is entered from the 'CodE' display.
Enter the password using the ▲ or ▼ buttons. Once the correct password has been entered, there is a two second delay after which the lower readout will change to show 'PASS' indicating that access is now unlocked.
The pass number is set to '1' when the controller is shipped from the factory.

Note; A special case exists if the password has been set to '0'. In this case access will be permanently unlocked and the lower readout will always show 'PASS'

Press the Scroll button to proceed to the 'Goto' display.

(If an incorrect password has been entered and the controller is still 'locked' then pressing Scroll at this point will simply return you to the ACCS list header.)
Note: From this code display, you can access "read only" configuration level by pressing ▲ and ▼ together.
To escape, press and together

3.2.3 Level Selection

The 'Goto' display allows you to select the required access level.

Use ▲ and ▼ to select from the following display codes:

OPEr: Operator level
FuLL: Full level
Edit: Edit level
conF: Configuration level

Press the Scroll button

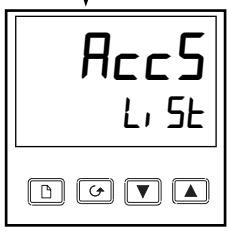

If you selected either 'OPEr, FuLL or Edit level you will be returned to the 'ACCS list header in the level that you chose. If you selected 'conF', you will get an alternative display showing 'ConF' in the upper readout (see below).

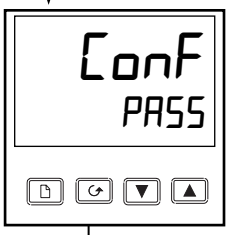

3.2.4 Configuration password

When the 'ConF' display appears, you must enter the Configuration password in order to gain access to Configuration level. Do this by repeating the password entry procedure described in the previous section

The configuration password is set to '2' when the controller is shipped from the factory. If you need to change the configuration password, see section **Error! Reference source not found.** Configuration.

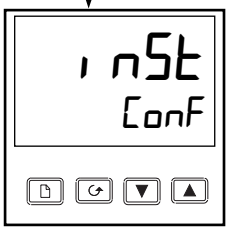

3.2.5 Configuration level

Press the Scroll button

The first display of configuration is shown. See section 4, 'Configuration' for details of the configuration parameters. For instructions on leaving configuration level see section 4, Configuration.

3.2.6 To Return to Operator Level

To return to operator level from either 'FuLL' or 'Edit' level, select 'OPEr' on the 'Goto' display, or turn the controller off and on.

In 'Edit' level the controller will automatically return to operator level if no button is pressed for 45 seconds. If an alarm is present in the process, this time is reduced to 10 seconds.

3.3 Edit Level

Edit level is used to set which parameters you can see and adjust in Operator level. It also gives access to the 'Promote' feature which allows you to select and add ('Promote') up to twelve parameters into the Home display list, thereby giving simple access to commonly used parameters.

3.3.1 To Set Operator Access to a Parameter

First you must select Edit level, as shown on the previous page.

Once in Edit level you select a list or a parameter within a list in the same way as you would in Operator or Full level hat is, you move from list header to list header by pressing the Page button, and from parameter to parameter within each list using the Scroll button. However, in Edit level what is displayed is not the value of a selected parameter but a code representing the parameter's availability in Operator level.

When you have selected the required parameter, use the ▲ and ▼ buttons to set its availability in operator level.

There are four codes:

ALtr Makes a parameter alterable in Operator level

Pro Promotes a parameter into the Home display list

rEAd Makes a parameter or list header read-only (it can be viewed but not altered)

HidE Hides a parameter or list header.

For example:

The parameter selected is the set point for Alarm 2 - Full Scale Low

It will be alterable in Operator level

3.3.2 To Hide or Reveal a Complete List

To hide a complete list of parameters, all you have to do is hide the list header. If a list header is selected only two selections are available: rEAd and HidE.
(It is not possible to hide the 'ACCS' list which will always display the code: 'LiSt')

3.3.3 To Promote a Parameter

Scroll through the lists to the required parameter and choose the 'Pro' code. The parameter is then automatically added (promoted) into the Home display list (the parameter will also be accessible as normal from the standard lists. a maximum of 12 parameters can be promoted. Promoted parameters are automatically 'alterable'.

4. CHAPTER 4 CONFIGURATION

Contents:

In configuration level you set up the following characteristics of the alarm unit:

- The display units and decimal point position.
- The input type and range
- The alarm functions
- The digital input functions
- The configuration of Alarm relays 1 and 2
- The configuration of outputs 1 and 2
- The communications configuration
- The passwords

WARNING

Configuration is protected by a password and should only be carried out by a qualified person authorised to do so. Incorrect configuration could result in damage to the process being controlled and/or personal injury. It is the responsibility of the person commissioning the process to ensure that the configuration is correct.

4.1 Selecting Configuration Level

There are two methods of selecting Configuration level:

1. If you have already powered up the alarm unit, follow the instructions given in Chapter 3: *Access levels*.
2. Alternatively pressing ▲ and ▼ together when powering up the alarm unit, will take you straight to the ConF password display.

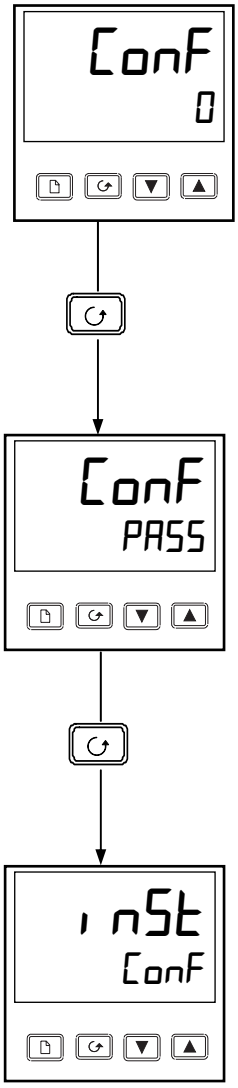

Password entry

When the 'ConF' display appears, press ▲ or ▼ to enter the configuration password.
The default password '2'.

When the correct password has been entered, there is a two second delay after which the lower readout will display 'PASS'.

Note: If the password has been set to '0', access is permanently enabled and the lower readout will always display 'PASS'.

Press the Scroll button to enter configuration level

inSt is the first display in configuration level.

(If an incorrect password has been entered, Scroll will take you to the 'Exit' display with 'no' in the lower readout. Simply press Scroll to return to the 'ConF' display.

4.2 Leaving Configuration Level

To leave Configuration level and return to Operator level, press until 'EXIT' appears.
Alternatively pressing and together will take you straight to the 'EXIT' display.

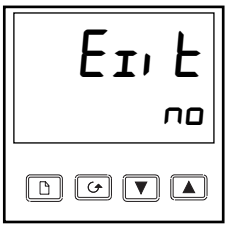

Press or to select 'YES'. After a two-second delay, the display will flash and revert to the Home display of Operator level.

4.3 Selecting a Configuration Parameter

The configuration parameters are arranged in lists as shown in Figures 5.1a and 5.1b. In this diagram each box depicts the display for a particular list header or parameter.

To select a particular parameter, first select the list in which the parameter appears. Press the button to step across the list headers. You can recognise a list header by the fact that it always displays 'ConF' in the lower readout. The upper readout is the name of the list.

Having selected a list header, press the Scroll button . to step down the parameters within the list. The upper readout shows the name of the parameter and the lower readout its value. Press the or buttons to change the value of a selected parameter. For a definition of each parameter, refer to the parameter tables at the end of this chapter.

When you reach the bottom of a list, pressing will take you back to the list header. From within a list you can return to the list header at any time by pressing the Page button .

4.4 Parameter Availability

The navigation diagram shows all the lists headers and parameters that can potentially be present in the alarm unit. In practice, those present will vary according to the particular configuration choices you make.

4.5 CONFIGURATION NAVIGATION DIAGRAM (PART A)

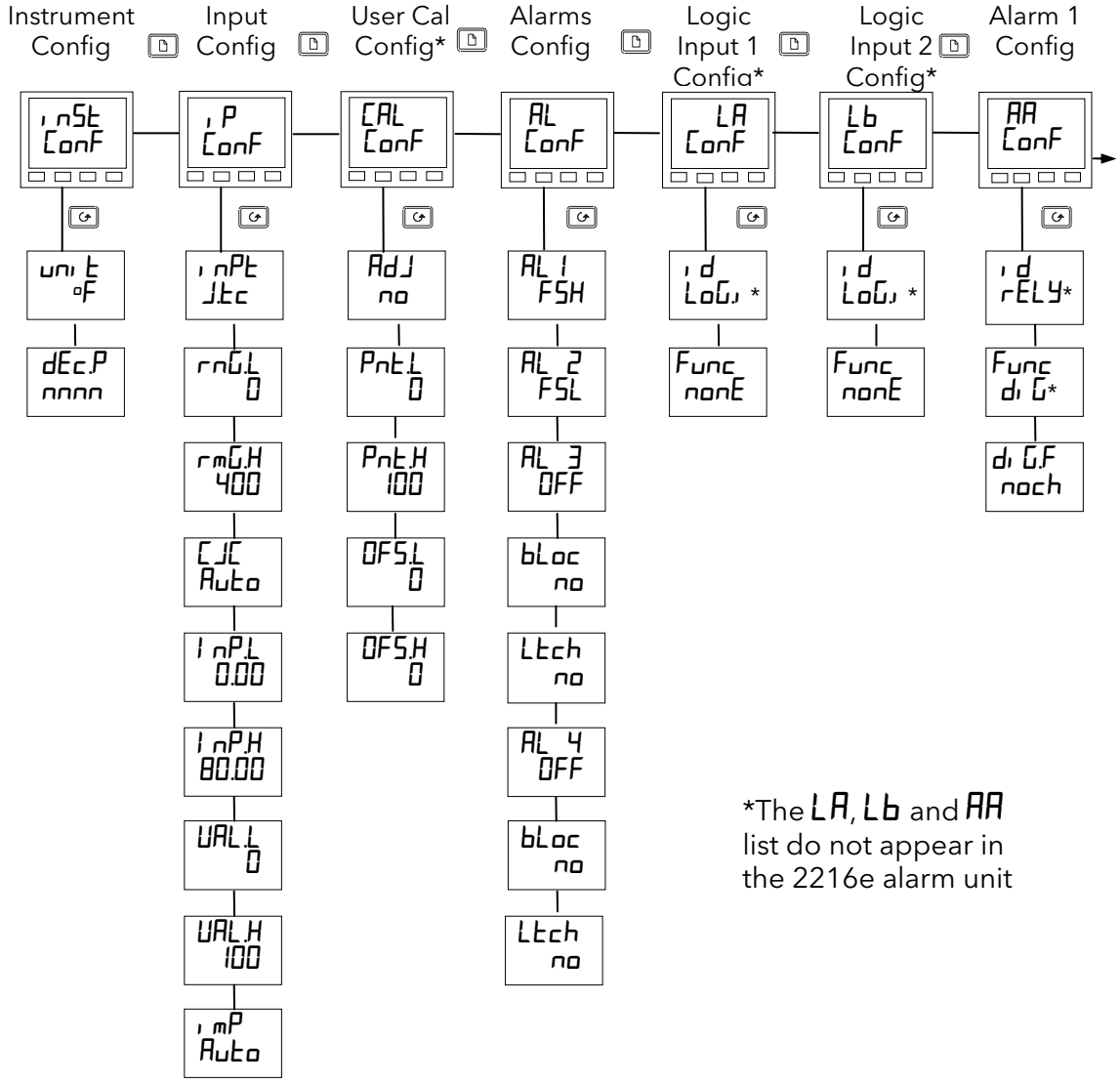

Figure 4-1a
Configuration navigation diagram (Part A)

CONFIGURATION NAVIGATION DIAGRAM *(PART B)*

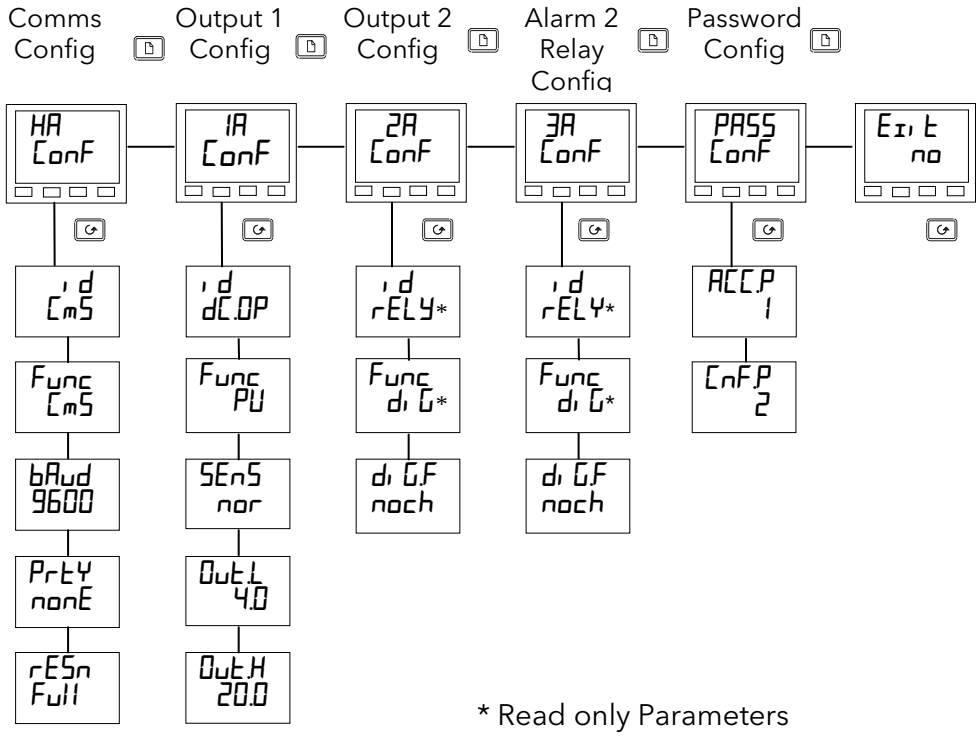

Figure 4-1b
Configuration navigation diagram (Part B)

4.6 CONFIGURATION PARAMETER TABLES

Name	Parameter description	Values	Meaning
inSt	**Instrument configuration**		
unit	Instrument units	°C	Centigrade
		°F	Farenheit
		°K	Kelvin
		nonE	Display units will be blanked
dEc.P	Decimal places in the displayed value	nnnn	None
		nnn.n	One
		nn.nn	Two

inP	**Input configuration**		
inPt	Input type	J.tc	J thermocouple
		K.tc	K thermocouple
		r.tc	R thermocouple (Pt/Pt13%Rh)
		b.tc	B thermocouple (Pt30%Rh/Pt6%Rh)
		n.tc	N thermocouple
		t.tc	T thermocouple
		S.tc	S thermocouple (Pt/Pt10%Rh)
		rtd	100Ω platinum resistance thermometer
		C.tc	This is the custom downloaded input type. The default is C thermocouple. If not, the name of the downloaded custom input will be displayed.
		mV	Linear millivolt
		volt	Linear voltage
rnG.L	Process value low range		Range low and range high act as alarm setpoint limits and as the PV retransmission limits
rmG.H	Process value high range		
The following parameters will appear if a linear input is chosen.			
inP.L	Input value low	Electrical input low value	
inP.H	Input value high	Electrical input high value	
VAL.L	Display reading low	Displayed reading corresponding to inp.L	
VAL.H	Display reading high	Displayed reading corresponding to inp.H	
imP	Sensor break input impedance trip level	OFF	Sensor break detection is disabled Appears for linear inputs only
		Auto	Trip level is set by the sensor input table
		Hi	Trip level is set at 7.5KΩ
		Hi H	Trip level is set at 15KΩ

Name	Parameter description	Values	

CAL	User Calibration enable		Description
AdJ	User Calibration enable	no	User calibration disabled. – Always set to 0
		YES	User calibration enabled

AL	Alarm configuration	Values	
AL 1	Alarm 1 Type	OFF	Alarm 1 disabled
		FSL	Full scale low alarm
		FSH	Full scale high alarm
AL2	Alarm 2 Type	OFF	Alarm 2 disabled
		FSL	Full scale low alarm
		FSH	Full scale high alarm
AL3	Alarm 3 Type	OFF	Alarm 3 disabled
		FSL	Full scale low alarm
		FSH	Full scale high alarm
bLoc	Alarm 3 Blocking	no	No alarm blocking
		YES	Alarm blocking active. The alarm will be 'blocked' until it has first entered a good state
Ltch	Alarm 3 Latching mode	no	Non-latching alarm
		Auto	Latching alarm with automatic reset. If the alarm is acknowledged it will automatically reset when it is no longer true
		mAn	Latching alarm with manual reset. The alarm can only be reset when it is no longer true.
		Eunt	Event output. Non-latching output with no alarm message
AL4	Alarm 4 Type	OFF	Alarm 3 disabled
		FSL	Full scale low alarm
		FSH	Full scale high alarm
bLoc	Alarm 4 Blocking	no	No alarm blocking
		YES	Alarm blocking active. The alarm will be 'blocked' until it has first entered a good state.
Ltch	Alarm 4 Latching mode	no	Non-latching alarm
		Auto	Latching alarm with automatic reset. If the alarm is acknowledged it will automatically reset when it is no longer true
		mAn	Latching alarm with manual reset. The alarm can only be reset when it is no longer true.
		Eunt	Event output. Non-latching output with no alarm message

Name	Parameter description	Values

LA	Logic input 1 configuration	Functions	Action on contact closure
id	Identity of input	LoGi	Logic input
Func	Function	nonE	None
		AcA1	Acknowledge alarm 1
		AcA2	Acknowledge alarm 2
		AcA3	Acknowledge alarm 3
		AcA4	Acknowledge alarm 4
		AcAL	Acknowledge all alarms
		AcPF	Acknowledge power fail alarm

Lb	Logic input 2 configuration	Functions	Action on contact closure
As per Logic input LA.			

AA	Alarm 1 relay output	Functions	Meaning
id	Identity of output	rELY	Relay (read only)
Func	Function	diG	Digital function (read only)
diGF	Digital functions	nocH	No change
		CLr	Disable power fail alarm
		PwrF	Power fail alarm enabled. When power fails the alarm 2 output will be de-energised on power-up.

HA	Comms module configuration	Functions	Meaning
id	Identity of the option installed	cmS	Comms module
Func	Function	nonE	Comms disabled
		cmS	Comms enabled
bAud	Baud Rate	1200, 2400, 4800, 9600, 19.20 (19,200)	
PrtY	Comms Parity	nonE	No parity
		EUEn	Even parity
		Odd	Odd parity
rESn	Resolution	int	Integer
		FuLL	Full

Name	Parameter description	Functions	Meaning
1A	**Output 1**	**Functions**	**Meaning**
id	Identity of module installed	nonE rELY dC.OP LoG SSr	No output fitted Relay output Dc output (retransmission) Logic (contact input) Triac output
Func	Function	nonE diG PU	No function Function set by diG.F. Only appears if output is relay or triac Retransmission of PV. Only appears if DC output fitted
If Func = nonE no further parameters appear			
If id = LoG these additional digital input functions will appear		Ac.A1 Ac.A2 Ac.A3 Ac.A4 Ac.AL Ac.PF	Acknowledge alarm 1 Acknowledge alarm 2 Acknowledge alarm 3 Acknowledge alarm 4 Acknowledge all alarms Acknowledge power fail alarm
diG.F	Digital output functions. These only appear if the module fitted is an output. Any number of the functions listed can be combined onto the logic output. Use the ▲ and ▼ buttons to select a desired output function. After two seconds the display will blink and return to the no.CH display. Use the arrows again to scroll through the function list. The previously selected function display will show two decimal points indicating that it has been added to the output.	no.CH 1 - - - 2 - - - 3 - - - 4 - - - mAn CLr Sbr PwrF HtrF LdF End SPAn SSrF nwAL rmtF CtSh CtOP	No change Alarm 1* Alarm 2* Alarm 3* Alarm 4* Clear all existing functions Not applicable Sensor break alarm Power fail alarm Not applicable Not applicable Not applicable Span error (PV out of range) Not applicable New alarm Not applicable Not applicable Not applicable
SEnS	Sense of output	nor inu	Normal *(output energised in alarm)* Inverted *(alarms de-energise in alarm)*
OutL	Retransmission output low limit	0 - 20.0	
OutH	Retrans. output high limit	0 - 20.0	

*In place of the dashes, the last three characters indicate the alarm type.

Name	Parameter description	Functions	Meaning

2A	Output 1	Functions	Meaning
id	Identity of module installed	nonE	No output fitted
		LoG	Logic (contact input)
		rELY	Relay output
Func	Function	nonE	No function
If Func = nonE no further parameters appear If id = LoG these additional digital input functions will appear		diG	Function set by diG.F
		Ac.A1	Acknowledge alarm 1
		Ac.A2	Acknowledge alarm 2
		Ac.A3	Acknowledge alarm 3
		Ac.A4	Acknowledge alarm 4
		Ac.AL	Acknowledge all alarms
		Ac.PF	Acknowledge power fail alarm
diG.F	Digital output functions. These only appear if the module fitted is an output. Any number of the functions listed can be combined onto the logic output. Use the ▲ and ▼ buttons to select a desired output function. After two seconds the display will blink and return to the no.CH display. Use the arrows again to scroll through the function list. The previously selected function display will show two decimal points indicating that it has been added to the output.	no.CH	No change
		CLr	Clear all existing functions
		1---	Alarm 1*
		2---	Alarm 2*
		3---	Alarm 3*
		4---	Alarm 4*
		mAn	Not applicable
		Sbr	Sensor break alarm
		Pwr.F	Power fail alarm
		HtrF	Not applicable
		LdF	Not applicable
		End	Not applicable
		SPAn	Span error (PV out of range)
		SSrF	Not applicable
		nwAL	New alarm
		rmtF	Not applicable
		CtSh	Not applicable
		CtOP	Not applicable
SEnS	Sense of output	nor	Normal (output energised in alarm)
		inu	Inverted (output de-energised in alarm)

*In place of the dashes, the last three characters indicate the alarm type.

Name	Parameter description	Functions	Meaning

3A	Alarm 2 relay output	Functions	Meaning
id	Identity of output	rELY	Relay (read only)
Func	Function	diG	Digital function (read only)
diGF	Digital functions	nocH	No change
		CLr	Disable power fail alarm
		PwrF	Power fail alarm enabled. When power fails the alarm 2 output will be de-energised on power-up.

4A	Not used		

PASS	Password list	Default value
ACCP	FuLL or Edit level password	1
cnFP	Configuration level Password	2

Exit	Exit configuration	no/YES	

5. APPENDIX A ORDERING CODE

The 2216e has, one FM compliant, alarm relay fitted as standard with a second optional FM alarm relay in Output 2. Output 1 is an option slot that can be fitted with either: dc retransmission of PV, an additional alarm relay output, or an alarm acknowledge input. A communications option is also available.

The 2208e and 2204e FM alarm units have two, FM compliant, alarm relay fitted as standard. In addition they have two option slots - outputs 1 and 2. Output 1 can be fitted with either: dc retransmission of PV, an additional alarm relay output, or an alarm acknowledgement input. Output 2 can be fitted with an extra, non–FM compliant alarm relay. A communications option is also available.

The FM compliant relay outputs are configurable as absolute high or low alarms. They are fixed as latching alarms, de-energised in the alarm state. It is not possible to configure them otherwise.

Model No	Function	Supply voltage	Output 1	Output 2	FM alarm relay 1	FM alarm relay 2	Comms	Manual	Non-standard No. (2)
	XX	VH			RF	RF(1)			EU0523

Model number	
2216e	1/16 DIN alarm unit
2208e	1/8 DIN alarm unit
2204e	1/4 DIN alarm unit

Supply voltage	
VH	100-230Vac ±15%

Output 1(1A)	
XX	Not fitted
PV retransmission	
D3	Fitted unconfigured
V1	0-20mA
V2	4-20mA
Relay output	
R1	Fitted unconfigured
FH	High alarm 4
FL	Low alarm 4
Logic I/O	
L1	Fitted unconfigured

Output 2 (2A):	
XX	Not fitted
2216e	
RF	FM alarm relay 2
AC	Alarm ack/reset
2208e & 2204e	
R1	Unconfigured Alarm relay
FH	High alarm 3 relay
FL	Low alarm 3 relay

FM alarm 2 relay output (3A)	
RF	Fitted as standard

FM alarm 1 relay (AA) -2208e & 2204e only	
RF	Fitted as standard

Comms	
2XX	Not fitted
2AM	EIA 232 Modbus
2YM	EIA 485 Modbus
2FM	EIA 422 Modbus

Manual	
XXX	No manual
ENG	English

Notes:
Omit this field for the 2216e FM unit
The non-standard number references the instrument's firmware

6. APPENDIX B SAFETY AND EMC INFORMATION

Please read this section before installing the controller

This controller meets the requirements of the European Directives on Safety and EMC, however, it is the responsibility of the installer to ensure the safety and EMC compliance of any particular installation.

Safety

This controller complies with the European Low Voltage Directive 2006/95/EC, amended by 93/68/EEC, by the application of the safety standard EN 61010(93).

Electromagnetic compatibility

This controller conforms with the essential protection requirements of the EMC Directive 2004/108/EC, by the application of a technical construction file.

6.1 Installation requirements for EMC

This unit satisfies the emissions and immunity standards for industrial environments.
To ensure compliance with the European EMC directive, certain installation precautions are necessary as follows:

- For general guidance refer to the EMC Installation Guide, HA025464.
- When using relay outputs, it may be necessary to fit a filter suitable for suppressing the conducted emissions. The filter requirements will depend on the type of load.
- If the unit is used in table top equipment which is plugged into a standard power socket, then it is likely that compliance to the commercial and light industrial emissions standard is required. In this case, to meet the conducted emissions requirement, a suitable mains filter should be installed.

Routing of wires

To minimise the pick-up of electrical noise, the low voltage DC connections and the sensor input wiring should be routed away from high-current power cables. Where it is impractical to do this, use shielded cables with the shield grounded at both ends.

6.2 Service and repair

This controller has no user serviceable parts. Contact your nearest Eurotherm Company or agent for repair.

6.3 Technical Specification for safety Purposes

Equipment ratings

Supply voltage:	100 to 230Vac ±15%
Supply frequency:	48 to 62Hz
Power consumption:	10Watts maximum
Relay ratings:	Min: 100mA at 12Vdc. Max: 2A resistive at 264Vac
Leakage current:	The leakage current through the external snubber supplied to suppress voltage spikes on relay contact outputs is less than 2mA at 264Vac, 50Hz
Over current protection:	External over current protection devices are required that match the wiring of the installation
Wire size	A minimum of 0.5mm^2 or 16awg wire is recommended
Fusing	Use independent fuses for the instrument supply and each relay output. Suitable fuses are T type, (IEC 127 time-lag type) as follows; Instrument supply: 100 to 230Vac, 2A, (T) Relay outputs: 2A (T).
Low level I/O:	All other input and output connections are intended for low level signals at less than 42V

Environmental ratings

Panel sealing	The alarm unit is intended to be panel mounted. The rating of panel sealing is defined by EN 60529: IP 65
Operating temperature:	0 to 55°C. Ensure the enclosure provides adequate ventilation
Relative humidity:	5 to 90%, non condensing
Atmosphere:	The instrument is not suitable for use above 2000m or in explosive or corrosive atmospheres

Electrical safety

Safety Standard:	Meets EN 61010, Installation category II, pollution degree 2 Voltage transients on any mains power connected to the instrument must not exceed 2.5kV Electrically conductive pollution must be excluded from the cabinet in which the instrument is mounted
Isolation:	All isolated inputs and outputs, have a reinforced isolation which provides protection against electric shock Non-isolated logic connections are electrically connected to the main process variable input, (e.g. the thermocouple)
Safety Symbols	Various symbols are used on the instrument, they have the following meaning: ⚠ Caution, (refer to accompanying A functional earth means one that is not required for safety purposes but is used for some functional purpose such as grounding EMC filters.

6.4 Installation Safety Requirements

Personnel

Installation must only be carried out by qualified personnel.

Enclosure of live parts

To prevent hands or metal tools touching parts that may be electrically live, the controller must be installed in an enclosure.

Wiring

It is important to connect the alarm unit in accordance with the wiring data given in this handbook. Take particular care not to connect AC supplies to the low voltage sensor input, DC, or logic inputs and outputs. Wiring installations must comply with all local wiring regulations.

Isolation

The installation must include a power isolating switch or circuit breaker. This device should be in close proximity to the alarm unit, within easy reach of the operator and marked as the disconnecting device for the instrument.

Overcurrent protection

To protect the internal PCB tracking within the alarm unit against excess currents, the AC power supply to the alarm unit and power outputs must be wired through the fuse or circuit breaker specified in the technical specification.

Voltage rating

The maximum continuous voltage applied between any of the following terminals must not exceed 264Vac:

- line or neutral to any other connection
- relay output to logic, DC or sensor input connections
- any connection to ground

The alarm unit should not be wired to a three phase supply with an unearthed star connection. Under fault conditions such a supply could rise above 264Vac with respect to ground and the product would not be safe.

Voltage transients across the power supply connections, and between the power supply and ground, must not exceed 2.5kV. Where occasional voltage transients over 2.5kV are expected or measured, the power installation to both the instrument supply and load circuits should include a transient limiting device.

These units will typically include gas discharge tubes and metal oxide varistors that limit and control voltage transients on the supply line due to lightning strikes or inductive load switching. Devices are available in a range of energy ratings and should be selected to suit conditions at the installation.

Conductive pollution

Electrically conductive pollution must be excluded from the cabinet in which the controller is mounted. For example, carbon dust is a form of electrically conductive pollution. To secure a suitable atmosphere, install an air filter to the air intake of the cabinet. Where condensation is likely, for example at low temperatures, include a thermostatically controlled heater in the cabinet.

Grounding

The non-isolated logic has an electrical path to the sensor input. Because of this, two possible conditions need to be considered:

- In some installations it is common practice to replace the temperature sensor while the alarm unit is still powered up. Under these conditions, we recommend that the shield of the temperature detector is grounded. Do not rely on grounding through the framework of the machine.

Electrostatic discharge precautions

When the controller is removed from its sleeve, some of the exposed electronic components are vulnerable to damage by electrostatic discharge from someone handling the controller. To avoid this, before handling the unplugged controller discharge yourself to ground.

7. RESTRICTION OF HAZARDOUS SUBSTANCES

Restriction of Hazardous Substances (RoHS)

Product group 2200

Table listing restricted substances

Chinese

限制使用材料一览表

产品 2200	有毒有害物质或元素					
	铅	汞	镉	六价铬	多溴联苯	多溴二苯醚
印刷线路板组件	X	O	X	O	O	O
附属物	O	O	O	O	O	O
显示器	X	O	O	O	O	O
模块	X	O	X	O	O	O
O	表示该有毒有害物质在该部件所有均质材料中的含量均在SJ/T11363-2006 标准规定的限量要求以下。					
X	表示该有毒有害物质至少在该部件的某一均质材料中的含量超出SJ/T11363-2006 标准规定的限量要求。					

English

Restricted Materials Table

Product 2200	Toxic and hazardous substances and elements					
	Pb	Hg	Cd	Cr(VI)	PBB	PBDE
PCBA	X	O	X	O	O	O
Enclosure	O	O	O	O	O	O
Display	X	O	O	O	O	O
Modules	X	O	X	O	O	O
O	Indicates that this toxic or hazardous substance contained in all of the homogeneous materials for this part is below the limit requirement in SJ/T11363-2006.					
X	Indicates that this toxic or hazardous substance contained in at least one of the homogeneous materials used for this part is above the limit requirement in SJ/T11363-2006.					

Approval

Name:	Position:	Signature:	Date:
Martin Greenhalgh	Quality Manager	Martin Greenhalgh	09/Feb/2007

IA029470U460 (CN23172) Issue 1 Feb 07

Eurotherm: International sales and support www.eurotherm.com

Contact Information

Eurotherm Head Office
Faraday Close,
Durrington,
Worthing, West Sussex,
BN13 3PL

Sales Enquiries
T +44 (01903) 695888
F 0845 130 9936

General Enquiries
T +44 (01903) 268500
F 0845 265982

Worldwide Offices
www.eurotherm.com/global

Scan for local contacts

©Copyright Invensys Eurotherm Limited 2013

Invensys, Eurotherm, the Eurotherm logo, Chessell, EurothermSuite, Mini8, Eycon, Eyris, EPower, EPack nanodac, piccolo, Foxboro, and Wonderware are trademarks of Invensys plc, its subsidiaries and affiliates. All other brands may be trademarks of their respective owners.

All rights are strictly reserved. No part of this document may be reproduced, modified or transmitted in any form by any means, neither may it be stored in a retrieval system other than for the purpose to act as an aid in operating the equipment to which the document relates, without the prior written permission of Invensys Eurotherm Limited.

Eurotherm Limited pursues a policy of continuous development and product improvement. The specifications in this document may therefore be changed without notice. The information in this document is given in good faith, but is intended for guidance only.

Eurotherm Limited will accept no responsibility for any losses arising from errors in this document.

invensys
Operations Management