MKS.TKS

MULTI - FUNCTION CONTROLLERS

- SMART TUNE - PID CONTROL
- UNIVERSAL, 3 WIRE - TC, RTD AND LINEAR INPUT
- 2 INDEPENDENT SET POINT RAMP UP/ DOWN PROFILES
- SERVO VALVE POSITIONER WITH POTENTIOMETER FEEDBACK
- mA CONTROL AND RETRANSMISSION OUTPUT
- PROCESS, BAND, DEVIATION AND CONTROL FAULT ALARMS
- RS 485 MODBUS SERIAL COMMS OPTION
- OPC BASED GRAPHICAL CONFIGURATION SOFTWARE

OVERVIEW

Designed to offer outstanding performance and provide a comprehensive solution for a wide variety of applications such as; food processing, plastic manufacturing, and process applications requiring heat/cool control process protection alarms.
Additional functionality includes; Servo valve positioner, (mA) linear control or retransmission output, CT input, ModBus communication interface option, PC Configuration software.
Universal-thermocouple or RTD input coupled with a responsive SMART auto-tuning PID control algorithm that is equipped with special functions including soft start and non linear cooling. A complete set of process protection alarm function; high and low limit, band and deviation are included.
The user interface is a large, dual 4 digit LED display with output and status beacons. Logic or Relay outputs are user configurable as either control, timer status or alarm functions. A logic input may be used to select up to 4 predefined operating set-points. NEMA 4X & IP65 panel sealing allows these units to be used in wash down or dusty applications.

SOFT START FUNCTION

The Soft-start feature provides time based output power limit protection. Limiting the heater power during startup reduces potential thermal stress on the heating elements. Both the Soft-start time and temperature threshold are configurable.

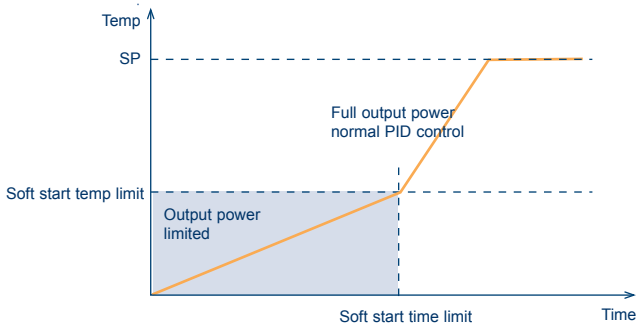

LOOP BREAK ALARM

Detects malfunctions in the control loop which make the process uncontrollable (e.g. TC short circuit, insufficient vapour temperature, partial or total break down of the actuator).

Advantages
- No additional measurement or monitoring instrumentation required
- May be used with all types of controlled variables

Protection Example
A thermocouple short circuit cannot be detected using conventional sensor impedance monitoring methods, however by using the LBA facility which continually monitors input signal changes with respect to the output demand this fault condition is quickly identified.

PROCESS PROTECTION ALARMS

Process (high or low limit), Band and Deviation alarm outputs are available with the additional flexibility of latching and masking functions until the process variable reaches the alarm threshold. Band and Deviation alarms are also masked after a set point change until the process variable reaches the alarm threshold. The alarm latching function holds the alarm on until it is acknowledged.

HEATER BREAK DETECTION

Measures the current in the load when the control output is ON and generates an alarm when the measured current is lower than a programmable value.

Advantages

- signals the partial or total load break down.
- displays the load current (in Amps) when the control output is ON.
- an external ammeter is not required.

OFD FUNCTION - OUTPUT FAILURE DETECTION (optional)

Using the CT input, the output failure detection function monitors the current in the load driven by output 1. Load and actuator protection is provided in the following way:

1. During the ON period of the output, the instrument measures the current through the load and it generates an alarm condition if this current is lower than a pre-programmed threshold. A low current shows a partial or total break down of the load or actuator SSR.

2. During the OFF period of the output, the instrument measures the leakage current through the load and it generates an alarm condition when this current is higher than a pre-programmed threshold value. A high leakage current shows a short circuit of the actuator.

OUTPUT POWER OFF

Turns all control and alarm outputs off.
In this mode the instrument operates as an indicator allowing the maintenance and monitoring of the process.

Advantages

- zone switch is now unnecessary
- energy saving is possible for batch processing
- process monitoring is a safety condition for the operator.
- bumpless control when resuming normal control operation.

SMART TUNING

Automatically adjusts the PID parameters according to the process dynamics.
An important characteristic of the ERO Electronic continuous self tuning algorithm is its ability to optimise control parameters without injecting any artificial disturbances into the system.

PRODUCT SPECIFICATIONS

Case: polycarbonate grey case.
Self extinguishing degree: according to UL 746 C.
Front protection: designed and tested for IP 65 (*) and NEMA 4X (*) for indoor locations (when panel gasket is installed).(*) In accordance with IEC 529, CEI 70-1 and NEMA 250-1991 STD.
Weight: 360g max. for TKS model - 490g max. for MKS model
Power supply: from 100 to 240V AC. 50/60Hz (+10 % to -15 % of the nominal value or 24V DC/AC (±10 % of the nominal value).
Power consumption: 6VA max
Common mode rejection ratio: > 120dB @ 50/60Hz.
Normal mode rejection ratio: > 60dB @ 50/60Hz.
EMC/Safety: this instrument is marked CE. It conforms to council directives 89/336/EEC (reference harmonized standard EN 50081-2 and EN 50082-2), 73/23/EEC and 93/68/EEC (reference harmonized standard EN 61010-1).
Installation category: II.
Sampling time: 250 mSec for linear inputs - 500 mSec for TC or RTD inputs
Accuracy: + 0.2% f.s.v. @ 25°C (77 °F) and nominal power supply voltage.
Operative temperature: from 0 to +50°C.
Storage temperature: from -20 to +70°C.
Humidity: from 20% to 85% RH not condensing.

MEASURING INPUTS

Thermocouples

Sensor break: detection of the open input circuit (wires or sensor) with underrange or overrange selectable indication.
Cold junction: automatic compensation for an ambient temperature between 0 and 50°C.
Cold junction compensation error: 0.1°C/°C.
Calibration: according to IEC 584-1.

Standard range table

TC typr	°C	°F
L	0/900	0/1650
L	0/400	0/1650
J	-100/1000	-150/1830
J	-100/400	-150/1830
K	-100/13700	-150/2500
K	-100/400	-150/2500
N	-100/1400	-150/2550
R	-50/1760	0/3200
S	-50/1760	0/3200
T	-199/400	-330/750
For MKS/TKS Servo only		
L	0/1820	0/3310

Linear input (mA e V)

Read-out: keyboard programmable from -1999 to 4000.
Decimal point: programmable in any position.

Standard range table

Input	Input without 0	Impedenza
0-20 mA	4-20 mA	< 5 Ω
0-60 mV	12-60 mV	>1 MΩ
0-5 V	1-5 V	>200 kΩ
0-10 V	2-10 V	>400 kΩ

RTD input

Type: Pt 100 3 wire connection.
Calibration: according to DIN 43760.
Line resistance: max 20Ω/wire with no measurable error.
Sensor break: detection of the sensor open circuit and of one or more wires in open cicuit. The instrument shows the short circuit indication when the resistance of the sensor is lower than 12Ω.

Standard range table

RTD type	°C	°F
Pt 100	-200/800	-330/1470
Pt 100	-199/400	-199/400

CONTROL ACTION

Algorithm: PID + SMART.

Types:
- one control output (heating)
- two control outputs (heating and cooling).

Proportional band: for MKS/TKS relay the proportional band is programmable from 1.0% to 100.0% of the input span. For MKS/TKS (mA) and Servo the proportional band is programmable from 1.0% to 200.0% of the input span. For all the models, setting a PB equal to 0 the control action becomes ON/OFF.

Hysteresis *(for ON/OFF control action)*: from 0,1% to 10,0% of the input span.

Integral time: from 1 second to 20 minutes or excluded.

Derivative time: from 1 second to 10 minutes or excluded.

Integral preload:
- for one control output, from 0 to 100% of the output range
- for two control outputs, from -100% to +100% of the heating/cooling output rang

Relative cooling gain: from 0.20 to 1.00 referred to the proportional band.

Overlap/dead band: from -20% (dead band) to +50% (overlap) of the proportional band.

Output limiters: for main and/or secondary control outputs it is possible to set:
- output high limits
- output low limits
- output max rate of rise.

ALARMS

Alarm action: direct or reverse function programmable.

Alarm functions: each alarm can be configured as a band alarm, deviation alarm or process alarm on the output value.

Alarm reset: automatic or manual reset programmable for each alarm.

Alarm masking: each alarm can be configured as a masked alarm or a standard alarm.

Hysteresis: programmable in engineering units from 1 to 200 digits.

Process alarm

Operative mode: minimum or maximum (programmable).

Threshold: programmable in engineering units within input range.

Band alarm

Operative mode: inside or outside band (programmable).

Threshold: two threshoulds are programmable: low - from 0 to -1000 units; high - from 0 to +1000 units.

Deviation alarm

Operative mode: high or low deviation (programmable).

Threshold: programmable from -1000 to +1000 units.

SERIAL INTERFACE (OPTIONAL)

Type: isolated RS 485.

Protocol type: MODBUS, JBUS, Polling Selecting.

Baud rate: programmable from 600 to 19200 BAUD.

Byte format: 8 bit programmable.

Stop bit: one.

Address: from 1 to 255.

MKS . TKS - Relay

MKS/TKS with relay or SSR output selectable
- Output failure detection alarm with load current measurement (OFD function).
- 2 programmable set points (main and auxiliary).

Outputs

Type: time proportioning.
Action: direct/reverse keyboard programmable.
Main output cycle time: programmable from 1 second to 200 seconds.
Secondary output cycle time: programmable from 1 second to 200 seconds.

Output 1 - Relay

Function: control output (heating).
Relay type: SPST. The selection of the NO or NC contact is made by jumper.
Contact rating: 3A @ 250V AC on resistive load.
note: for this output only, the relay output and SSR output are both fitted, the used output is selectable by jumper

Output 1 - SSR

- Logic level 1: 14V DC ±20% @ 20mA max.
  24V DC ±20% @ 1mA max.
- Logic level 0: < 0.5 V DC.

Output 2 and 3

Type: relay with SPST contact.
Contact rating: 2A @ 250V AC on resistive load.

Output 4 (optional)

Type: relay with SPST contact.
Contact rating: 2A @ 250V AC on resistive load.
Function: alarm 3 output.

Output Relay

These instruments are equipped with 3 independent outputs programmable as:

	Uscita 1	Uscita 2	Uscita 3
mode 1	Heating	AL1	AL2+LBA
mode 2	Heating	Cooling	AL2+LBA
mode 3	Heating	AL1	AL2+OFD+LBA
mode 4	Heating	Cooling	AL2+OFD+LBA

SET POINT

Two set point are available: - main set point (SP1)
- second set point (SP2).

Set point transfer: transfer from SP to SP2 may be selected by logic input (contact closure).
note: the transfer may be done by a step transfer or by a ramp with two different programmable rates of rise (ramp up and ramp down).

Set point limiters: set point low limit and set point high limit are programmable.

LOGIC INPUT

These instruments are equipped with a logic input to be used to select between main set point and second set point (SP or SP2).

MKS . TKS - mA

MKS/TKS-mA with linear output
- one linear output (mA) programmable as control output or analog retransmission of the measured value or operative set point.
- 4 local set points selectable by logic inputs.
- 24V DC auxiliary power supply.

Outputs- mA

Action: direct/reverse keyboard programmable.
Main output cycle time: programmable from 1 second to 200 seconds .
Secondary output cycle time: programmable from 1 second to 200 seconds .

Output 1

Type: optoisolated 0-20 mA or 4-20 mA.
Function: Programmable as:
- Control output (heating or cooling)
- Retransmission of the measured value
- Retransmission of the operative set point.

Scaling: programmable from -1999 to 4000.
Maximum load: 500Ω.
Resolution: - 0.1% when used as control output.
- 0.05% when used as analog retransmission.

Digital filter: output retransmission filter, with the same time constant selected for the readout.
Output level indication: (as control output only) from 00.0 to 100.0%.
Output status indication: the OUT 1 indicator flashes with a duty cycle proportional to the output level.

Output 2 - Relay

note: for this output only, the relay output and SSR output are both fitted, the used output is selectable by jumper.

Function: control output (heating)
Relay type: SPST. Contact NO or NC selectable by jumper.
Contact rating: 3A @ 250V AC on resistive load.

Output 2 - SSR

- logic level 1: 14V DC + 20% @ 20mA max.
  24V DC + 20% @ 1mA max.
- logic level 0: < 0.5V DC.

Output 3

Type: relay with SPST contact.
Function: control output or alarm 2 output.
Contact rating: 2A @ 250V AC on resistive load.

Output 4

Type: relay with SPTST contact
Function: alarm 3 output
Contact rating: 2A @ 250V AC on resistive load

Outputs mA

	Output 1	Output 2	Output 3
mode 1	Heating	AL1	AL2
mode 2	Heating	Cooling	AL2
mode 3	Heating	AL1	Cooling
mode 4	Cooling	Heating	AL2
mode 5	Cooling	AL1	Heating
mode 6	Retrans.	Heating	AL2
mode 7	Retrans.	AL1	Heating
mode 8	Retrans.	Heating	Cooling
mode 9	Retrans.	Cooling	Heating
mode 10	Retrans.	AL1	AL2

SET POINT - mA

Set points available : SP, SP2, SP3 and SP4.
Set point transfer: transfer may be driven by logic input (contact closure).
note: the transfer may be done by a step transfer or by a ramp with two different programmable rates of rise (ramp up and ramp down).
Set point limiters: set point low limit and set point high limit are programmable.

LOGIC INPUT - mA

These instruments are equipped with 2 logic inputs (contact) used for the operative set point selection SP, SP2, SP3 and SP4 (binary code).

AUXILIARY POWER SUPPLY - mA

Type: not isolated 24V DC.
Maximum current: 25mA with short circuit protection.
Output variation: ± 10% of the nominal value.

MKS . TKS - Servo

For MKS/TKS-Servo with servomotor control output
- 4 local set points selectable by logic inputs.
- AUTO/MANUAL transfer with programmable valve positioning.

Outputs-Servo

Action: direct/reverse keyboard programmable.
Main output cycle time: programmable from 1 second to 200 seconds.
Secondary output cycle time: programmable from 1 second to 200 seconds.

Output 1 and 2 servomotor

Type: 2 relays interlocked (Open/Closed).
Relay: SPST contact (NO).
Contact rating: 3A @ 250V AC on resistive load.

Output 1 Relay

Function: control output.
Relay type: SPST. Contact NO or NC selectable by jumper.
Contact rating: 3A @ 250V AC on resistive load.

Output 3

Type: relay with SPST contact.
Contact rating: 2A @ 250V AC on resistive load.

Output 4 (optional)

Type: relay with SPST contact.
Contact rating: 2A @ 250V AC on resistive load.
Function: output of the alarm 3.

Outputs MKS . TKS - Servo

	Output 1	Output 2	Output 3
mode 1	Servomotor Output		AL1
mode2	Heating	-	AL1
mode 3	Heating	-	Cooling
mode 4	Cooling	-	Heating

Control output

1. Closed loop Feedback:
Potentiometer range: from 100Ω to 10KΩ.
Servomotor dead band: from 1% to 50% of the selected servomotor stroke.
Control action: direct or reverse programmable.
Valve position limiter: low and high limiters programmable.

2. Open loop servomotor with valve position indication:
Potentiometer range: from 100Ω to 10KΩ.
Servomotor dead band: from 1% to 50% of the feedback potentiometer span.
Servomotor stroke time: programmable from 6 seconds to 3 minutes.
Control action: direct or reverse programmable.

3. Open loop servomotor without valve position indication:
Servomotor dead band: from 1% to 50% of the selected servomotor stroke time.
Servomotor stroke time: programmable from 6 seconds to 3 minutes.
Control action: direct or reverse programmable.

4. One time proportioning output:
Output used: output 1.
Control action: direct or reverse programmable.
Output cycle time: from 1 second to 200 seconds.
Output power limiting: high and low limit programmable.

5. Two time proportioning outputs:
Output used: output 1 and 3.
Output cycle time: from 1 second to 200 seconds.
Output power limiting: high and low limit programmable

SET POINT - Servo

4 set points are available: SP, SP2, SP3 and SP4 (selectable by logic inputs 1 and 3).
Set point transfer: transfer may be driven by logic input (contact closure).
note: the transfer may be done by a step transfer or by a ramp with two different programmable rates of rise (ramp up and ramp down).
Set point limiters: set point low limit and set point high limit are programmable.

LOGIC INPUT - Servo

These instruments are equipped with 3 logic inputs (contact closure). Logic inputs 1 and 3 may be used for the operative set point selection SP, SP2, SP3 and SP4 (binary code). Logic input 2 may be programmed for Auto/Manual mode selection or Direct/Reverse control action.

REAR TERMINAL BLOCK

MKS.TKS Relay

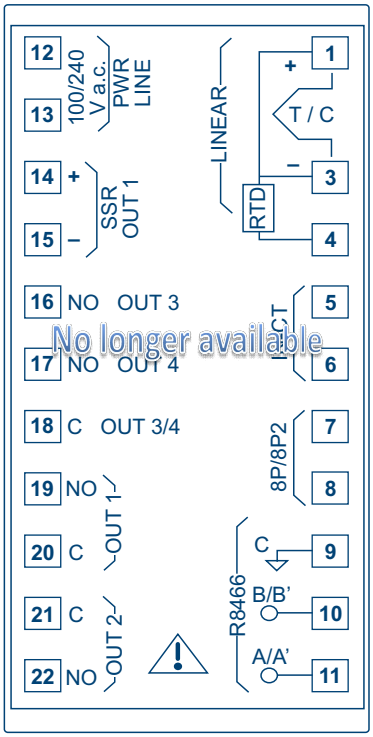

MKS.TKS mA

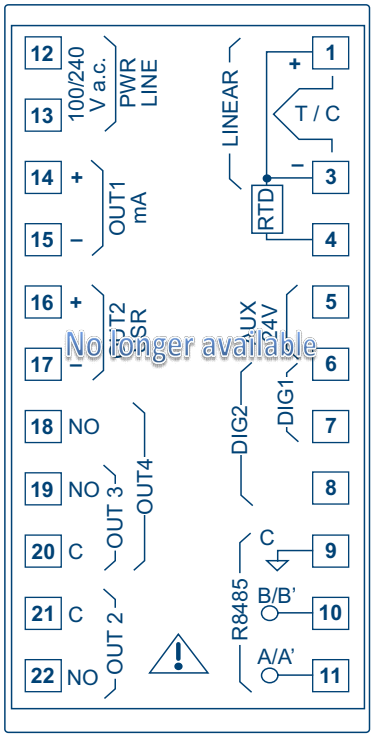

MKS.TKS Servo

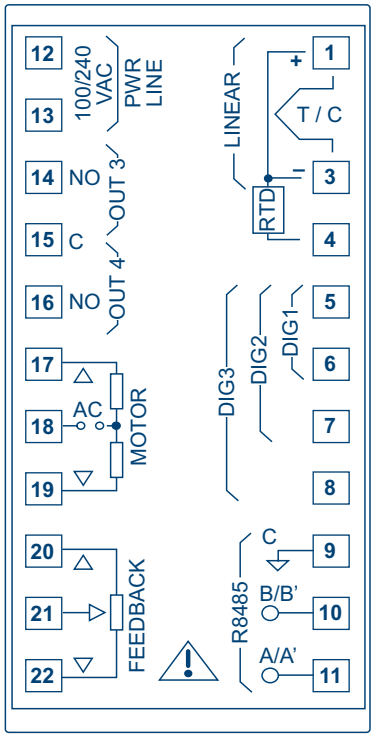

DIMENSIONS AND PANEL CUT - OUT [MKS]

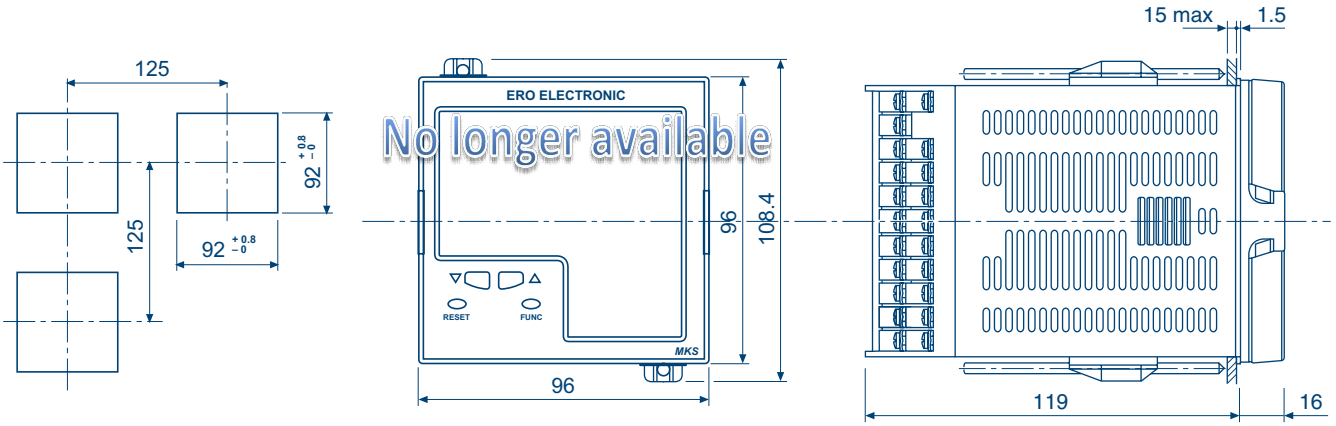

DIMENSIONS AND PANEL CUT - OUT [TKS]

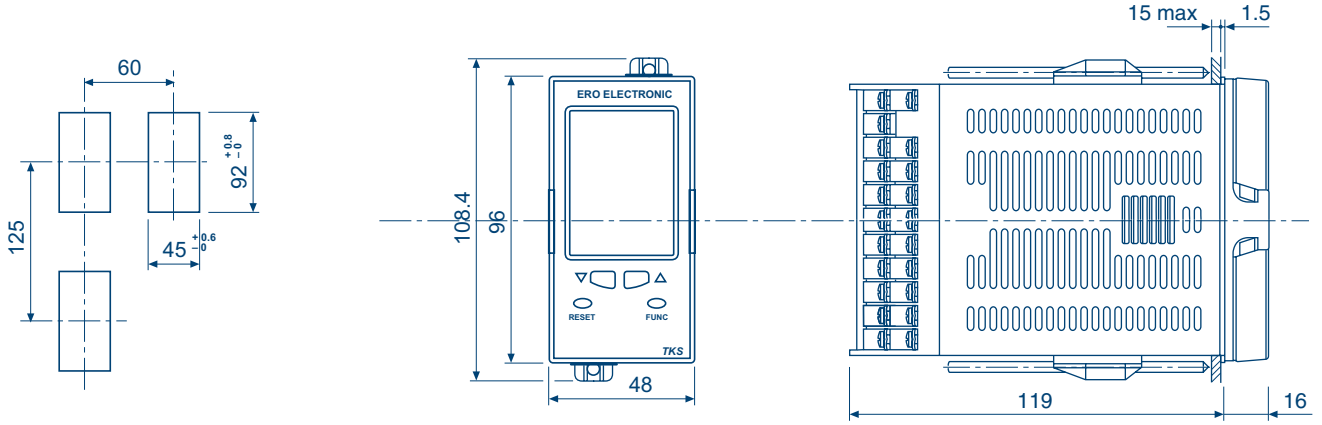

HOW TO ORDER

Current transformer (for instrument with OFD option only)

MODEL	PRIMARY CURRENT
CTR current transformer	1 10A
	2 25A
	4 50A
	5 100A
CTR	

DIMENSIONS CTR

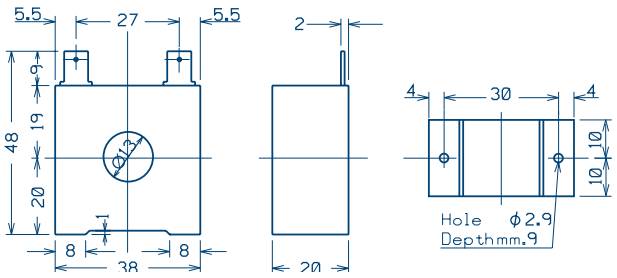

MKS.TKS

HOW TO ORDER [MKS.TKS Relay]

MODEL	OUTPUTS	OPTIONS	POWER SUPPLY	CUSTOMISATION
MKS 1/4 DIN TKS 1/8 DIN	9311 Two relay outputs + 1 alarm or one control output (C) + 2 logic inputs	1 not provided 2 OFD alarm + output 4 3 RS-485 + output 4 4 S[illegible] + [illegible] alarm + [illegible]	3 100/240V AC 5 24V AC or DC	000 Standard ERO Label 0B0 Blank - no manual
	9311			

No longer available

HOW TO ORDER [MKS.TKS mA]

MODEL	OUTPUTS	OPTIONS	POWER SUPPLY	CUSTOMISATION
MKS 1/4 DIN TKS 1/8 DIN	9371 1 mA output + 2 relay outputs + 2 logic inputs + auxiliary power supply	2 Output 4 3 RS-485 + output 4	3 100/240V AC 5 24V AC/DC	000 Standard ERO Label 0B0 Blank - no manual
	9371			

No longer available

HOW TO ORDER [MKS.TKS servo]

MODEL	OUTPUTS	OPTIONS	POWER SUPPLY	CUSTOMISATION
MKS 1/4 DIN TKS 1/8 DIN	9321 1 servomotor output + 1 relay outputs + 3 logic inputs	2 Output 4 3 RS-485 + output 4	3 100/240V AC 5 24V AC/DC	000 Standard ERO Label 0B0 Blank - no manual
	9321			

ERO ELECTRONIC
VIA XXIV MAGGIO 22070 GUANZATE (CO) ITALY
TEL. + 39 031 975 111 FAX. + 39 031 977 512
SALES@EROELECTRONIC.COM - WWW.EROELECTRONIC.COM
ERO ELECTRONIC a division of EUROTHERM S.r.l.